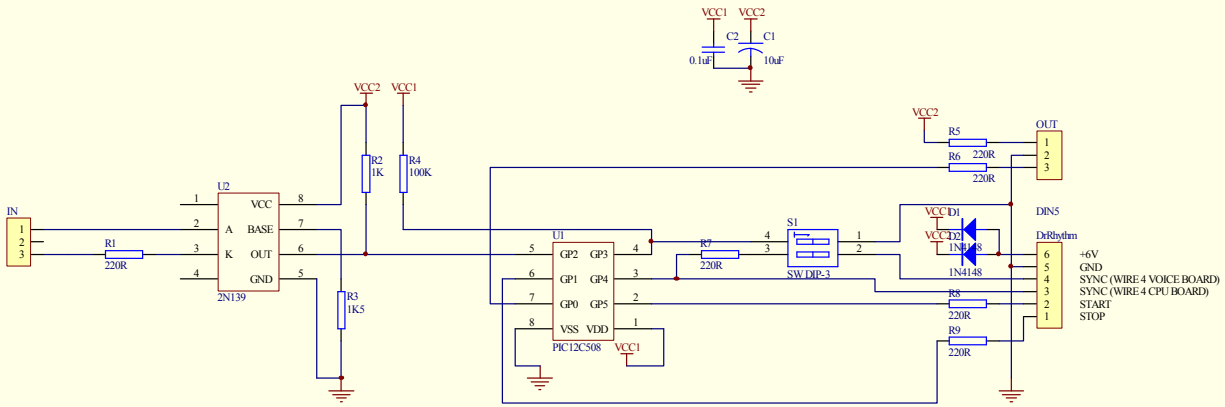

Title		
Size: B	Number	Revision
Date: 12-Apr-2005		Sheet of
File: H:\PSF - Protel98\MIDIDINSYNCv2.sch		Drawn By: